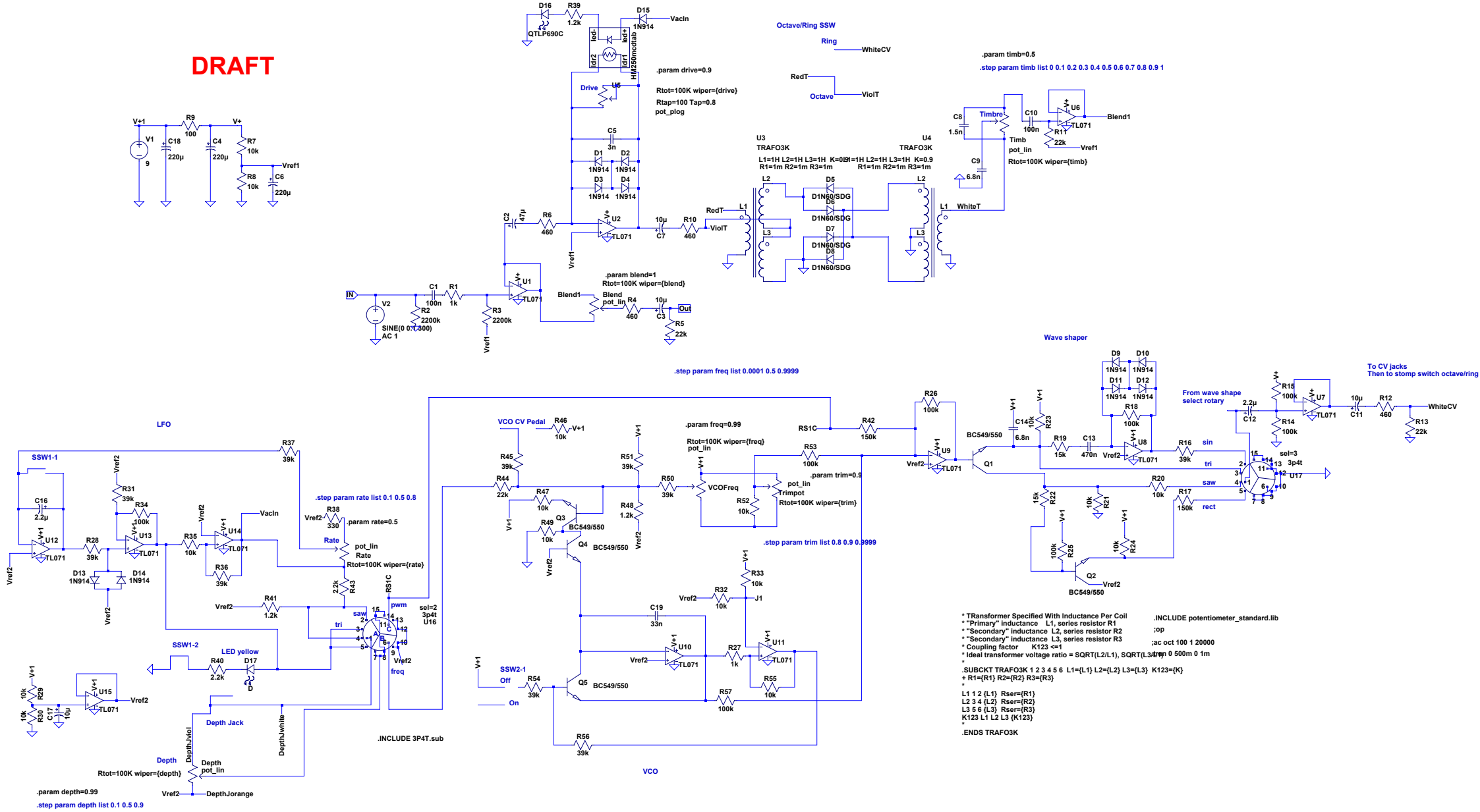

--- C:\Program Files\LTC\SwCADIII\examples\various\Ring Stinger\RS v3.asc ---